NEURO VARIO-SPRING 2

	Dorsiflexion Stop	Plantar Flexion Stop
Main Function	static	none (with dorsiflexion assist)
Adjustment Options	adjustable	

The NEURO VARIO-SPRING 2 system ankle joint comes with integrated noise reduction.

The NEURO VARIO-SPRING 2 system ankle joint can be converted into the NEURO CLASSIC system ankle joint free moving by optionally filing the system stirrup and by exchanging the functional unit.

The NEURO CLASSIC with plug + go modularity and the NEURO VARIO-CLASSIC 2 can be used as supporting joints for the NEURO VARIO-SPRING 2 system ankle joint.

plug+go MODULARITY

The NEURO VARIO-SPRING 2 system ankle joint can be converted into the NEURO CLASSIC with plug + go modularity, NEURO VARIO-CLASSIC 2, NEURO VARIO 2, NEURO VARIO-SWING, NEURO SWING, NEURO SWING-CLASSIC, NEURO SWING 2 and NEURO HiSWING system ankle joints by exchanging the functional unit and in the case of the NEURO HiSWING by mounting the spirit level as well.

FIOR&GENTZ
NEURO
VARIO-SPRING 2

10mm 12mm 14mm 16mm 20mm

Joint Dimensions [mm]

Dimension	Description	System Width a 10mm	12mm	14mm	16mm	20mm
b	joint head width	35	42	52	61	70
c	joint height	30	38	45.5	55	67.5
	joint thickness	10	11	13	15	16.5

Joint Weights [g]

Material	Unit	System Width 10mm	12mm	14mm	16mm	20mm
steel	piece	27	47	80	95	164
titanium	piece	-	38	66	75	134

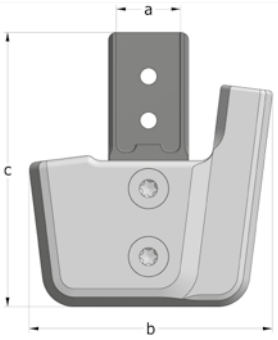

The NEURO VARIO-SPRING 2 system ankle joint is delivered with the following articles:
cover plate pressing aid
orthosis joint grease, 3g
assembly/lamination dummy

➡ Please order shaping dummy, system stirrups and system side bars/anchors separately.
➡ You will find the shaping dummy on catalogue page B60.7.
➡ You will find system stirrups plug + go modularity on catalogue page B60.8f.
➡ You will find system side bars/anchors on catalogue page I1ff.

straight
fig. 1

bent inwards
fig. 2

bent outwards
fig. 3

Straight (Fig. 1)

Material	Leg Side	Unit	Article Number for System Width				
			10mm	12mm	14mm	16mm	20mm
steel	left lateral or right medial	piece	SF8200-L/ST	SF8201-L/ST	SF8202-L/ST	SF8203-L/ST	SF8205-L/ST
	left medial or right lateral	piece	SF8200-R/ST	SF8201-R/ST	SF8202-R/ST	SF8203-R/ST	SF8205-R/ST
titanium	left lateral or right medial	piece	-	SF8201-L/TI	SF8202-L/TI	SF8203-L/TI	SF8205-L/TI
	left medial or right lateral	piece	-	SF8201-R/TI	SF8202-R/TI	SF8203-R/TI	SF8205-R/TI

Bent Inwards (Fig. 2)

Material	Leg Side	Unit	Article Number for System Width				
			10mm	12mm	14mm	16mm	20mm
steel	left lateral or right medial	piece	SF8220-L/ST	SF8221-L/ST	SF8222-L/ST	SF8223-L/ST	SF8225-L/ST
	left medial or right lateral	piece	SF8220-R/ST	SF8221-R/ST	SF8222-R/ST	SF8223-R/ST	SF8225-R/ST
titanium	left lateral or right medial	piece	-	SF8221-L/TI	SF8222-L/TI	SF8223-L/TI	SF8225-L/TI
	left medial or right lateral	piece	-	SF8221-R/TI	SF8222-R/TI	SF8223-R/TI	SF8225-R/TI

Bent Outwards (Fig. 3)

Material	Leg Side	Unit	Article Number for System Width				
			10mm	12mm	14mm	16mm	20mm
steel	left lateral or right medial	piece	SF8240-L/ST	SF8241-L/ST	SF8242-L/ST	SF8243-L/ST	SF8245-L/ST
	left medial or right lateral	piece	SF8240-R/ST	SF8241-R/ST	SF8242-R/ST	SF8243-R/ST	SF8245-R/ST
titanium	left lateral or right medial	piece	-	SF8241-L/TI	SF8242-L/TI	SF8243-L/TI	SF8245-L/TI
	left medial or right lateral	piece	-	SF8241-R/TI	SF8242-R/TI	SF8243-R/TI	SF8245-R/TI

Spare Parts

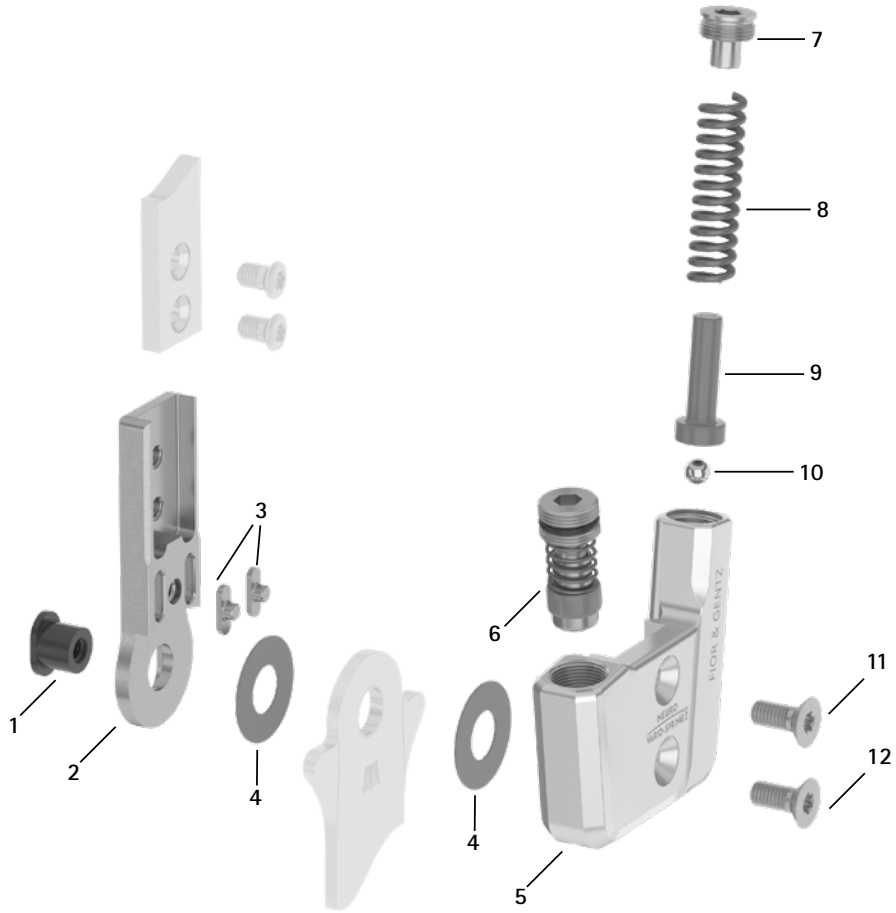

Upper Part with Feather Keys, Preassembled (2–3)

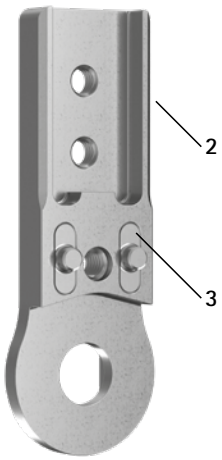

Spare Parts Screw Unit (6)

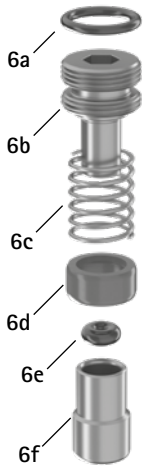

Spare Parts

Item	Article Number for System Width 10mm	12mm	14mm	16mm	20mm	Description
1	SB6039-L0580*	SB7049-L0590*	SB8559-L0630*	SB9669-L0760*	SB1069-L0960*	bearing nut*
2-3	SF0310-P/ST	SF0311-P/ST	SF0312-P/ST	SF0313-P/ST	SF0315-P/ST	upper part with feather keys, straight, steel
2-3	-	SF0311-P/TI	SF0312-P/TI	SF0313-P/TI	SF0315-P/TI	upper part with feather keys, straight, titanium
2-3	SF0330-P/ST	SF0331-P/ST	SF0332-P/ST	SF0333-P/ST	SF0335-P/ST	upper part with feather keys, bent inwards, steel
2-3	-	SF0331-P/TI	SF0332-P/TI	SF0333-P/TI	SF0335-P/TI	upper part with feather keys, bent inwards, titanium
2-3	SF0330-8P/ST	SF0331-8P/ST	SF0332-8P/ST	SF0333-8P/ST	SF0335-8P/ST	upper part with feather keys, bent outwards, steel
2-3	-	SF0331-8P/TI	SF0332-8P/TI	SF0333-8P/TI	SF0335-8P/TI	upper part with feather keys, bent outwards, titanium
3	SF0390-01	SF0391-01	SF0392-02	SF0393-02	SF0395-02	feather key with pin
4	GS1206-**	GS1407-**	GS2009-**	GS2210-**	GS2611-**	sliding washer**
5	SF0860-L/AL	SF0861-L/AL	SF0862-L/AL	SF0863-L/AL	SF0865-L/AL	cover plate, left lateral or right medial
5	SF0860-R/AL	SF0861-R/AL	SF0862-R/AL	SF0863-R/AL	SF0865-R/AL	cover plate, left medial or right lateral
6	SC9607-L04	SC9608-L06	SC9611-L08	SC9612-L08	SC9612-L08	screw unit
6a	VE3771-04/10	VE3771-050/10	VE3771-08/15	VE3771-09/15	VE3771-09/15	O-ring for securing the alignment screw
6b	SC9607-L04/S	SC9608-L06/S	SC9611-L08/S	SC9612-L08/S	SC9612-L08/S	alignment screw
6c	FE1615-01	FE1611-01	FE1916-01	FE1027-01	FE1027-01	coil spring
6d	GS0604-350	GS0705-525	GS1007-350	GS1108-500	GS1108-500	sliding bushing
6e	PN0003-L02	PN0004-L02	-	-	-	stop damper
6e	-	-	VE3771-010/20	VE3771-012/26	VE3771-012/26	O-ring damper
6f	SH0490-01	SH0491-01	SH0492-01	SH0493-01	SH0493-01	plunger
7	SC2007-L04	SC2008-L04	SC2009-L05	SC2011-L05	SC2011-L05	pressure screw
8	FE1622-01	FE1734-01	FE2736-01	FE2945-01	FE2966-02	coil spring, golden
9	SF0840-07	SF0841-07	SF0842-08	SF0843-10	SF0845-10	pin
10	KU1004-ST	KU1004-ST	KU1004-ST	KU1005-ST	KU1005-ST	ball
11	SC1403-L08	SC1404-L10	SC1405-L11	SC1405-L12	SC1405-L14	countersunk flat head screw with hexalobular socket
12	SC1403-L08	SC1404-L10	SC1405-L11	SC1405-L12	SC1406-L14	countersunk flat head screw with hexalobular socket (axle screw)
5-12	SF8970-L/AL*	SF8971-L/AL*	SF8972-L/AL*	SF8973-L/AL*	SF8975-L/AL*	functional unit plug + go modularity, left lateral or right medial*
5-12	SF8970-R/AL*	SF8971-R/AL*	SF8972-R/AL*	SF8973-R/AL*	SF8975-R/AL*	functional unit plug + go modularity, left medial or right lateral*

* For a conversion from the NEURO CLASSIC with plug + go modularity, this longer bearing nut is required in addition to the functional unit (see item 1).

Feather Key Set

Item	Article Number for System Width 10mm	12mm	14mm	16mm	20mm	Description	Unit
w/o fig.	SF0390	SF0391	SF0392	SF0393	SF0395	feather key set	set

➡ The feather key set contains two feather keys with pin and the outer assembly/lamination dummy to make pressing easier. You can order the set if the feather keys have to be exchanged.

** Sliding Washers

Article Number for System Width 10mm	12mm	14mm	16mm	20mm
Ø = 12mm	Ø = 14mm	Ø = 20mm	Ø = 22mm	Ø = 26mm
GS1206-040	GS1407-040	GS2009-040	GS2210-040	GS2611-040
GS1206-045	GS1407-045	GS2009-045	GS2210-045	GS2611-045
GS1206-050	GS1407-050	GS2009-050	GS2210-050	GS2611-050
GS1206-055	GS1407-055	GS2009-055	GS2210-055	GS2611-055
GS1206-060	GS1407-060	GS2009-060	GS2210-060	GS2611-060

The last three digits of the article number stand for the thickness of the sliding washer, e.g. GS1407-**040**. The thickness of this sliding washer is 0.40mm.
In total, the sliding washers are available in five different thicknesses. The thickness of a sliding washer is indicated by the markings. For example, a sliding washer with two notches is 0.40mm thick, whereas a sliding washer with one notch is 0.55mm thick.

0.40mm 0.45mm 0.50mm 0.55mm 0.60mm

➡ You will find system stirrups plug + go modularity on catalogue page B60.8f.
➡ You will find the system side bars and system anchors on catalogue page I1ff.

Assembly/Lamination Dummies, Shaping Dummy and Joint Retainers (1, 2, 3)

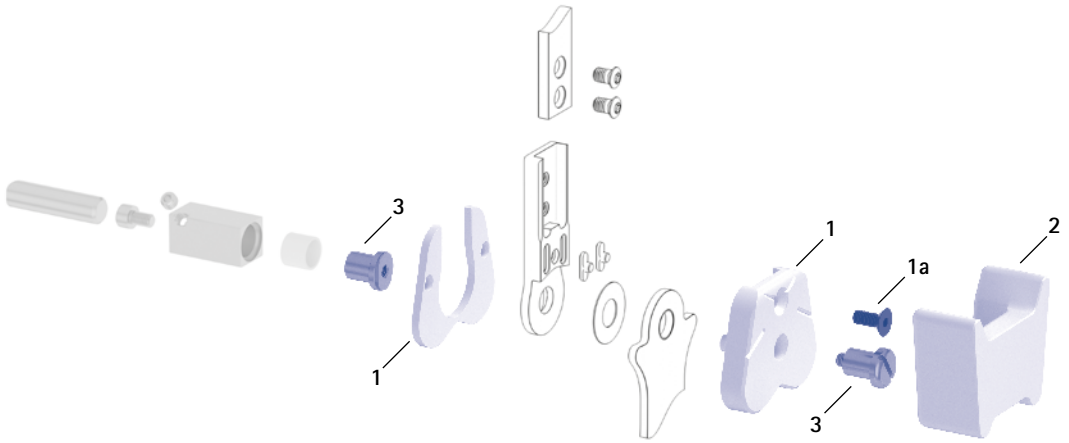

Assembly/Lamination Dummies, Shaping Dummy and Joint Retainers

Item	Article Number for System Width 10mm	12mm	14mm	16mm	20mm	Description	Unit
1	SF0950-LR1	SF0951-LR1	SF0952-LR1	SF0953-LR1	SF0955-5LR1	assembly/lamination dummy, two parts (2 dummies with screw)	set
1a	SC1053-L08	SC1054-L10	SC1055-L12	SC1055-L12	SC1055-L12	countersunk flat head screw with hexagon socket	piece
2	SF0950-LR2	SF0951-LR2	SF0952-LR2	SF0953-LR2	SF0955-5LR2	shaping dummy	piece
3	PE1010-01/LR	PE1011-01/LR	PE1012-LR	PE1013-LR	PE1025-LR	joint retainer	piece
	1/Y	2/Z	4/B	5/C	7/C	laser marking	-

➡ Assembly/lamination dummies are included in the scope of delivery of the system joints.

➡ You will find an overview of our tools on catalogue page J1ff.

➡ You will also find the joint retainers and the corresponding laser markings in the tool case on the catalogue pages J13 and J14.

Cover Plate Pressing Aid

Item	Article Number for System Width 10mm	12mm	14mm	16mm	20mm	Description	Unit
4	WE5000-SF	WE5001-SF	WE5002-SF	WE5002-SF	WE5002-SF	cover plate pressing aid (pressing screw and washer)	set

➡ The cover plate pressing aid is included in the scope of delivery of the system joints.

Cover Plate Pressing Aid (4)

rivet stirrup

lamination/prepreg stirrup

thermoformage stirrup

side view

General Measures of the System Stirrups plug + go Modularity

Measure [mm]	System Width 10mm	12mm	14mm	16mm	20mm
thickness	2.0	2.0	2.5	3.0	3.0
neck width	16.0	19.4	23.2	26.6	30.8
bore hole diameter	6.0	7.0	8.5	9.6	10.5

Bent

Description	Leg/Leg Side	Unit	Article Number and Measures for System Width 10mm	12mm	14mm	16mm	20mm
rivet stirrup	left or right	piece	FB5070-LR/ST3	FB5071-LR/ST3	FB5082-LR/ST4	FB5093-LR/ST4	FB5015-LR/ST5
length from the middle of the bore hole [mm]			104	112	124	144	164
weight [g]			33	43	69	112	143
lamination/prepreg stirrup	left lateral or right medial	piece	FB5170-L/ST1	FB5171-L/ST1	FB5182-L/ST1	FB5193-L/ST1	FB5115-L/ST1
	left medial or right lateral		FB5170-R/ST1	FB5171-R/ST1	FB5182-R/ST1	FB5193-R/ST1	FB5115-R/ST1
length from the middle of the bore hole [mm]			28	40	54	64	68
weight [g]			10	16	32	53	70
thermoformage stirrup	left or right	piece	FB5270-LR/ST2	FB5271-LR/ST2	FB5282-LR/ST2	FB5293-LR/ST2	FB5215-LR/ST3
length from the middle of the bore hole [mm]			49	54	61	67	73
weight [g]			14	19	34	53	66

rivet stirrup

lamination/prepreg stirrup

thermoformage stirrup

Straight						
Description	Unit	Article Number and Measures for System Width				
		10mm	12mm	14mm	16mm	20mm
rivet stirrup	piece	FB5070-ST/3	FB5071-ST/3	FB5082-ST/4	FB5093-ST/4	FB5015-ST/5
length from the middle of the bore hole [mm]		105	113	125	145	165
weight [g]		33	43	69	112	143
lamination/prepreg stirrup	piece	FB5170-ST/1	FB5171-ST/1	FB5182-ST/1	FB5193-ST/1	FB5115-ST/1
length from the middle of the bore hole [mm]		29	41	55	65	69
weight [g]		10	16	32	53	70
thermoformage stirrup	piece	FB5270-ST/2	FB5271-ST/2	FB5282-ST/2	FB5293-ST/2	FB5215-ST/3
length from the middle of the bore hole [mm]		50	55	62	68	74
weight [g]		14	19	34	53	66

Spare Parts System Stirrup						
Item	Article Number for System Width					Description
	10mm	12mm	14mm	16mm	20mm	
1	BP0706-L020	BR0807-L020	BR1009-L025	BR1110-L030	BR1211-L030	sliding bushing

➡ All system stirrups of the NEURO VARIO-SPRING 2 system ankle joint are delivered with an integrated sliding bushing.

Information for Processing

Rivet Stirrup:

➡ This system stirrup is riveted to the foot piece.

Lamination/Prepreg Stirrup:

➡ This system stirrup is embedded into the laminate of the foot piece.

Thermoformage Stirrup:

➡ This system stirrup is embedded into thermoformable plastics, but can be embedded into laminates as well.

Spare Parts System Stirrup

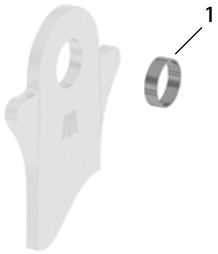

➡ The system stirrup is marked with lines in the neck area in order to read the joint angle.