NEURO MATIC

Main Function	monocentric, automatic stance phase control with posterior offset - preassembled in 5° flexion
Activation	mechanical locking and unlocking via the system ankle joint
Type of Extension Stop	static extension stop
Adjustment Options	flexion angle can be adjusted as required (0°, 10°) by exchanging the joint's upper part
Other Functions	mode change via lever on the cover plate basic function in Auto mode - locked in stance phase, free moving in swing phase - range of motion in extension can be limited as required by exchanging the joint's upper part (swing phase) - flexion angle can be adjusted as required by exchanging the joint's upper part (stance phase) alternative function in Lock mode - permanently mechanically locked via lever alternative function in Free mode - permanently mechanically unlocked via lever

The NEURO MATIC system knee joint can be converted into the NEURO TRONIC system knee joint by exchanging the functional unit and other corresponding system components and into the NEURO HiTRONIC system knee joint by exchanging the system joint.

The NEURO VARIO system knee joint can be used as a supporting joint for the NEURO MATIC system knee joint.

To produce an orthosis with a NEURO MATIC system knee joint, you need the following components:

- ➡ system knee joint (page F10.4)
- ➡ component set (page F10.7)
- ➡ system side bars/anchors (page J1ff.)

16mm

20mm

Joint Dimensions [mm]

Dimension	Description	System Width a	
		16mm	20mm
b	joint head width	45	56
c	joint height	85	95
d	posterior offset	16	20
e	distance pivot point – lower system case	30	32
f	distance pivot point – upper system case	7	8
	joint thickness	15	15

Joint Weights [g]

Material	Unit	System Width	
		16mm	20mm
titanium	piece	108	158

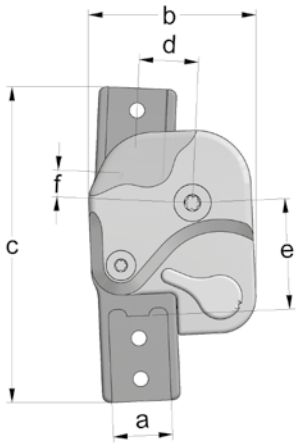

The NEURO MATIC system knee joint is delivered with the following articles:

orthosis joint grease, 3g

assembly/lamination dummy

➡ Please order the component and lamination dummy set, the lamination dummy for the controller and the system side bars/anchors separately.

➡ You will find the component and lamination dummy set on catalogue page F10.7.

➡ You will find the lamination dummy for the controller on catalogue page F10.9.

➡ You will find system side bars/anchors on catalogue page I1ff.

Note: to produce a KAFO with a NEURO MATIC system knee joint, you need the corresponding component set for the orthosis type as well as the corresponding adaptor screw for the system ankle joint.

straight
fig. 1

bent inwards distally
fig. 2

bent outwards distally
fig. 3

Straight (Fig. 1)

Material	Leg Side	Unit	Article Number for System Width	
			16mm	20mm
titanium	left lateral or right medial	piece	SK3353-L/TI	SK3355-L/TI
	left medial or right lateral	piece	SK3353-R/TI	SK3355-R/TI

Bent Inwards Distally (Fig. 2)

Material	Leg Side	Unit	Article Number for System Width	
			16mm	20mm
titanium	left lateral or right medial	piece	SK3373-L/TI	SK3375-L/TI
	left medial or right lateral	piece	SK3373-R/TI	SK3375-R/TI

Bent Outwards Distally (Fig. 3)

Material	Leg Side	Unit	Article Number for System Width	
			16mm	20mm
titanium	left lateral or right medial	piece	SK3343-L/TI	SK3345-L/TI
	left medial or right lateral	piece	SK3343-R/TI	SK3345-R/TI

Spare Parts

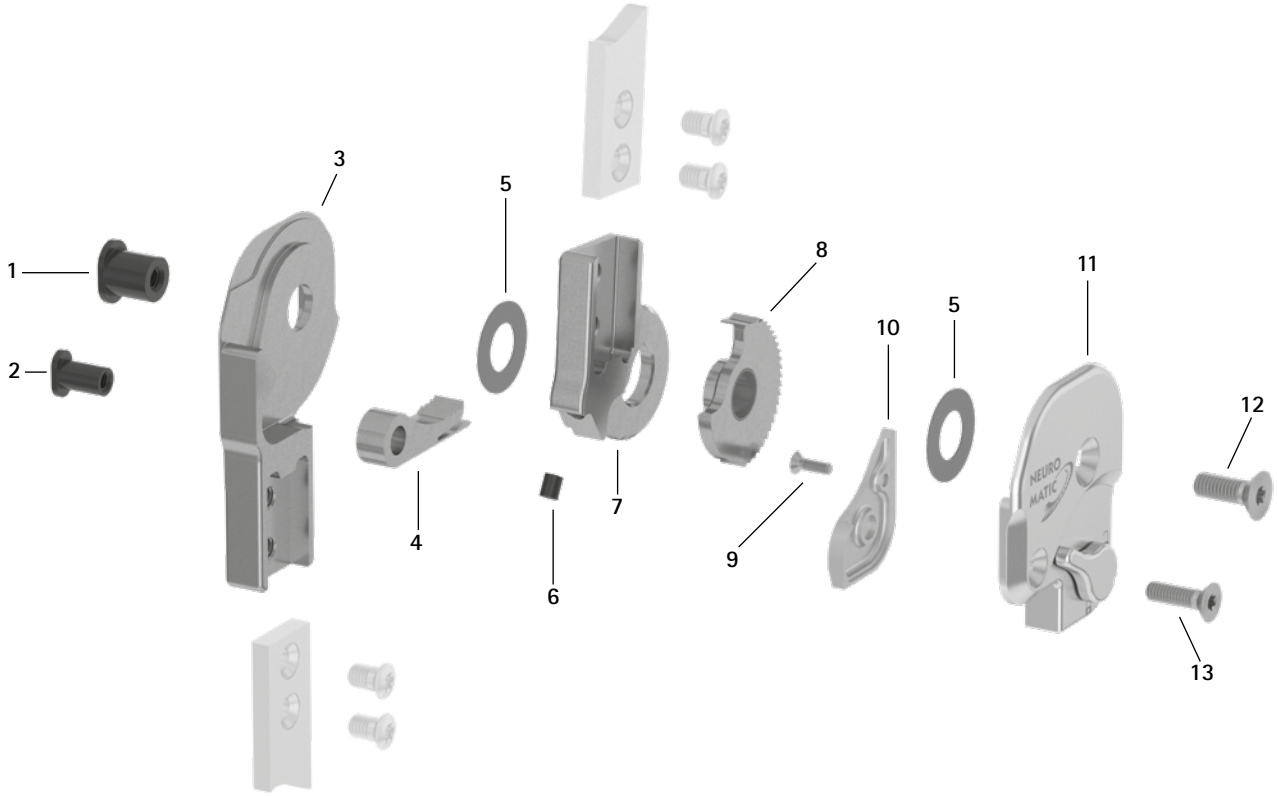

Toothed Ring with Sliding Bushing, Preassembled (8)

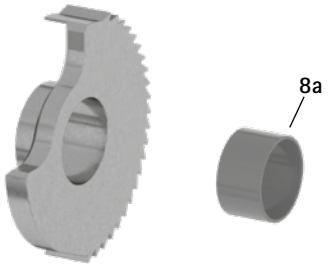

Spare Parts

Item	Article Number for System Width 16mm	20mm	Description
1	SB9669-L0990	SB1069-L1000	bearing nut (joint axis)
2	SB6049-L0990	SB8559-L1000	bearing nut (locking pawl)
3	SK0313-L/TI	SK0315-L/TI	lower part, left lateral or right medial, straight, titanium
3	SK0313-R/TI	SK0315-R/TI	lower part, left medial or right lateral, straight, titanium
3	SK0333-L/TI	SK0335-L/TI	lower part, left lateral or right medial, bent inwards, titanium
3	SK0333-R/TI	SK0335-R/TI	lower part, left medial or right lateral, bent inwards, titanium
3	SK0333-8L/TI	SK0335-8L/TI	lower part, left lateral or right medial, bent outwards, titanium
3	SK0333-8R/TI	SK0335-8R/TI	lower part, left medial or right lateral, bent outwards, titanium
4	SK0373	SK0375-2	locking pawl
5	GS1910-*	GS2411-*	sliding washer*
6	PN1000-L06	PN1000-L06	extension stop damper
7	SK0303-2L/TI	SK0305-2L/TI	5° upper part, left lateral or right medial, straight, titanium
7	SK0303-2R/TI	SK0305-2R/TI	5° upper part, left medial or right lateral, straight, titanium
8	SK0363-2L	SK0365-2L	toothed ring with sliding bushing, left lateral or right medial, titanium
8	SK0363-2R	SK0365-2R	toothed ring with sliding bushing, left medial or right lateral, titanium
8a	BP1110-L059	BP1211-L059	sliding bushing
9	SC1403-L08/1	SC1403-L08/1	countersunk flat head screw with hexalobular socket
10	SK0353-4L/AL	SK0355-4L/AL	small cover plate, left lateral or right medial, aluminium
10	SK0353-4R/AL	SK0355-4R/AL	small cover plate, left medial or right lateral, aluminium
11	SK3393-L	SK3395-L	cover plate with lever, left lateral or right medial
11	SK3393-R	SK3395-R	cover plate with lever, left medial or right lateral
12	SC1405-L14	SC1406-L14	countersunk flat head screw with hexalobular socket (axle screw)
13	SC1404-L14	SC1405-L14	countersunk flat head screw with hexalobular socket
9–13	SK3383-L	SK3385-L	functional unit, left lateral or right medial
9–13	SK3383-R	SK3385-R	functional unit, left medial or right lateral

* Sliding Washers

Article Number for System Width 16mm	20mm
Ø = 19mm	Ø = 24mm
GS1910-040	GS2411-040
GS1910-045	GS2411-045
GS1910-050	GS2411-050
GS1910-055	GS2411-055
GS1910-060	GS2411-060

The last three digits of the article number stand for the thickness of the sliding washer, e.g. GS1910-040. The thickness of this sliding washer is 0.40mm. In total, the sliding washers are available in five different thicknesses. The thickness of a sliding washer is indicated by the markings. For example, a sliding washer with two notches is 0.40mm thick, whereas a sliding washer with one notch is 0.55mm thick.

0.40mm 0.45mm 0.50mm 0.55mm 0.60mm

➡ You will find the system side bars and system anchors on catalogue page I1ff.

Component Set (1)

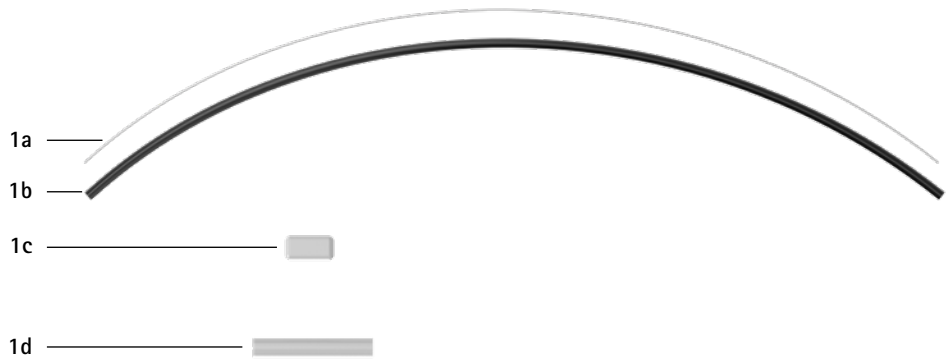

Lamination Dummy Set for the Conversion to NEURO TRONIC (2)

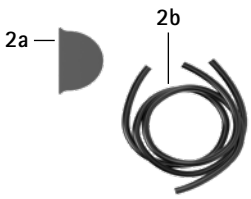

Component Set

Item	Article Number	Description	Unit	Quantity	
				Unilateral	Bilateral
1	SK3300-LR	component set, unilateral	set	1	-
1	SK3300	component set, bilateral	set	-	1
1a	RM0500-ST008	wire, steel, 500mm long	piece	2	4
1b	ZS0104-L500	cable cover with inner tube, 500mm long	piece	1	2
1c	SK0935-06	lamination dummy for cable cover guidance	piece	1	2
1d	SK0935-05	cable cover conduit made of plastic	piece	1	2
w/o fig.	OB1000-XL	cloth bag for orthoses with logo	piece	1	1

Lamination Dummy Set for the Conversion to NEURO TRONIC

Item	Article Number	Description	Unit	Quantity	
				Unilateral	Bilateral
2	SK3850-1	lamination dummy set, unilateral	set	1	-
2	SK3850-2	lamination dummy set, bilateral	set	-	1
2a	ET0971-1	lamination dummy for cable length compensation, 4mm	piece	1	2
2b	SK0935-11	lamination dummy for solenoid connection cable, 250mm	piece	1	1
2b	SK0935-12	lamination dummy for solenoid connection cable, 170mm	piece	-	1
2b	SK0935-13	lamination dummy for solenoid connection cable, 85mm	piece	-	1

Upper Parts (3)

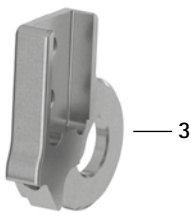

Upper Parts

Item	Article Number for System Width		Description
	16mm	20mm	
3	SK0303-L/TI	SK0305-L/TI	0° upper part, left lateral or right medial, straight, titanium
3	SK0303-R/TI	SK0305-R/TI	0° upper part, left medial or right lateral, straight, titanium
3	SK0303-4L/TI	SK0305-4L/TI	10° upper part, left lateral or right medial, straight, titanium
3	SK0303-4R/TI	SK0305-4R/TI	10° upper part, left medial or right lateral, straight, titanium

Adaptor Screw for NEURO VARIO-SPRING, NEURO VARIO-SPRING 2 and NEURO CLASSIC-SPRING (4)

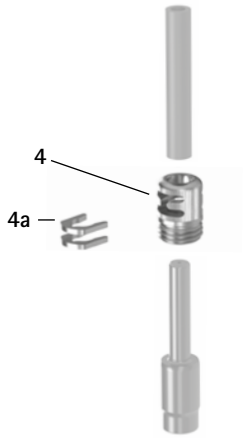

Adaptor Unit for NEURO VARIO-SWING, NEURO CLASSIC-SWING, NEURO SWING and NEURO SWING 2 (5)

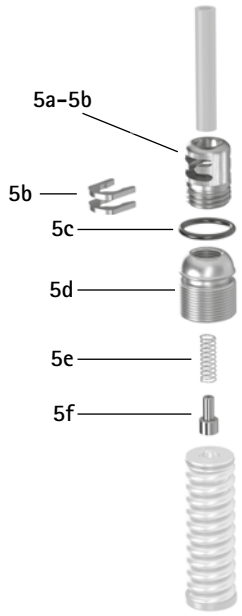

Adaptor Screw for NEURO VARIO-SPRING

Item	Article Number for System Width 14mm	16mm	20mm	Description
4	SC3018-L12	SC3009-L12	SC3010-L13	adaptor screw with 2 retaining washers
4a	SK0395-01	SK0395-01	SK0395-01	retaining washer

Adaptor Screw for NEURO VARIO-SPRING 2 and NEURO CLASSIC-SPRING

Item	Article Number for System Width 10mm	12mm	14mm	16mm	20mm	Description
4	SC3007-L15	SC3008-L15	SC3009-L17	SC3011-L17	SC3011-L17	adaptor screw with 2 retaining washers
4a	SK0395-01	SK0395-01	SK0395-01	SK0395-01	SK0395-01	retaining washer

Adaptor Unit for NEURO VARIO-SWING, NEURO CLASSIC-SWING, NEURO SWING and NEURO SWING 2

Item	Article Number for System Width 14mm	16mm	20mm	Description
5	SC3012-L15	SC3014-L16	SC3018-L18	adaptor unit
5a–5b	SC3208-L15	SC3208-L15	SC3208-L15	adaptor screw with 2 retaining washers
5b	SK0395-01	SK0395-01	SK0395-01	retaining washer
5c	VE3771-09/15	VE3771-11/15	VE3771-125/15	O-ring for securing the alignment screw
5d	SC3012-L15/0	SC3014-L16/0	SC3018-L18/0	alignment screw
5e	FE1415-01	FE1415-01	FE1415-01	pressure spring
5f	SF0593-1/0	SF0593-1/0	SF0593-1/0	pin

Assembly/Lamination Dummies and Joint Retainers

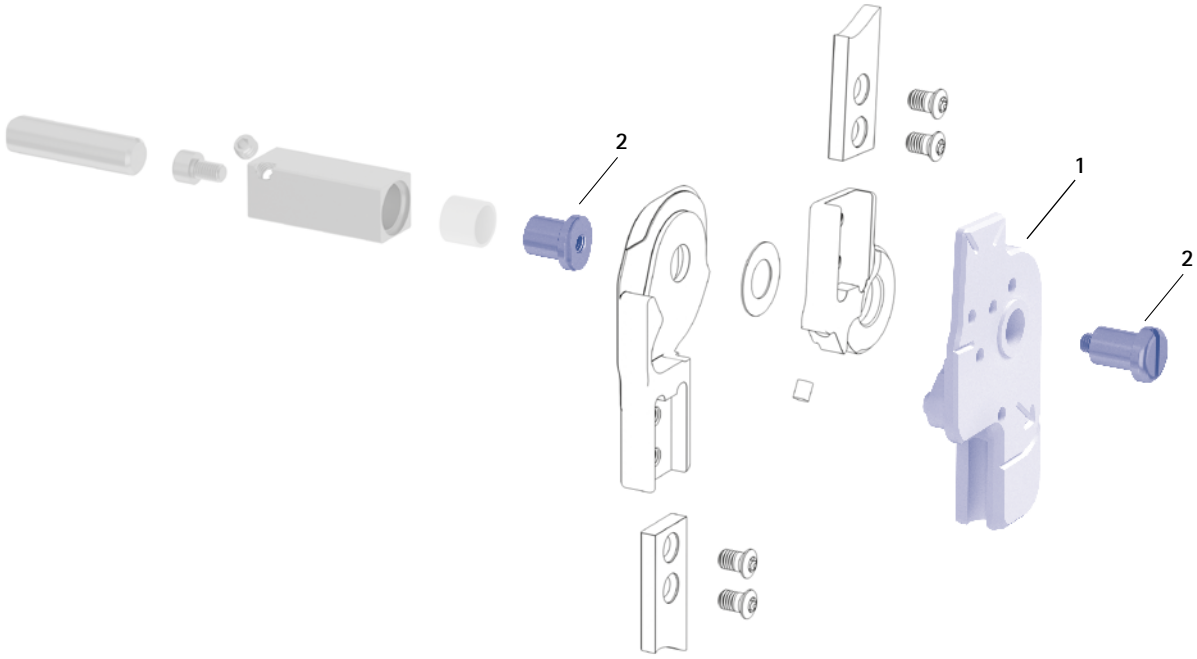

Assembly/Lamination Dummies and Joint Retainers

Item	Article Number for System Width 16mm	20mm	Description	Unit
1	SK0933-L	SK0935-L	assembly/lamination dummy, left lateral or right medial	piece
1	SK0933-R	SK0935-R	assembly/lamination dummy, left medial or right lateral	piece
2	PE1015-LR	PE1025-LR	joint retainer	piece
	6/C	7/C	laser marking	-

➡ Assembly/lamination dummies are included in the scope of delivery of the system joints.

➡ You will find an overview of our tools on catalogue page J1ff.

➡ You will also find the joint retainers and the corresponding laser markings in the tool case on the catalogue pages J13 and J14.

Lamination Dummy for Controller (3)

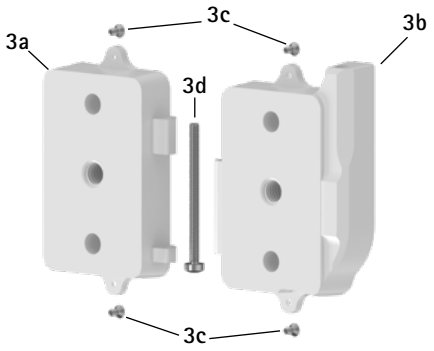

Lamination Dummy for Controller*

Item	Article Number	Description	Unit
3	ET0935	lamination dummy for controller, two parts	set
3a	ET0935-1	lamination dummy for controller, battery side	piece
3b	ET0935-2	lamination dummy for controller, cable side	piece
3c	SC1302-L04	countersunk flat head screw with cross recess H, 4 pieces	piece
3d	SC0403-L40	pan head screw with hexalobular socket	piece

* You need this lamination dummy for a potential conversion into NEURO TRONIC.

CROSSROADS

Orthosis Shoes. Different.

FIOR & GENTZ
ORTHOPÄDIETECHNIK MIT SYSTEM

Comfortable fit with and without orthosis.

CROSSROADS orthosis shoes always guarantee a perfect fit thanks to their special design and the carefully chosen material. The integrated elastic textile material as well as two removable insoles offer a flexible volume. Furthermore, it is possible to create an outsole elevation with an EVA sheet and to re-attach a vibram® flat sole to the shoe. CROSSROADS is available as a pair in four different combinations of the widths REGULAR and SLIM, which makes the fit ideal for any foot – with and without orthosis.

Shoe Measurements		Use
pitch*	15mm	h-Cast
heel height**	25mm	Orthosis Configurator

* The height of the pitch corresponds to the height of the h-Cast plate to be used in the physical examination.
** The heel height is used in the Orthosis Configurator as part of the calculation basis.

Size	36–48	
Material	high quality leather – certified cow leather used for the upper material and calf leather used for the inner lining ensure the highest wearing comfort	
Shoe Designs	REGULAR left and right SLIM left and right	REGULAR left/SLIM right SLIM left/REGULAR right

All orthosis shoes are sold in pairs for each shoe size.

You will find CROSSROADS orthosis shoes on catalogue page L10.1.